WB/PB 115 Series Eddy-Current and Powder Dynamometers

FEATURES

- 4 Models with Maximum Torque from 50 N·m to 200 N·m (36 lb·ft to 147 lb·ft)
- Braking Power: 5 kW to 30 kW
- Stable Braking Torque, without Shock
- Low Moment of Inertia
- Low Residual Torque
- Operation in Either Rotational Direction
- Braking Torque Measurement Included
- High Rotational Speed
- Rated Torque Available From Zero Speed (Powder Dynamometers)
- Integrated Optical Speed Sensor

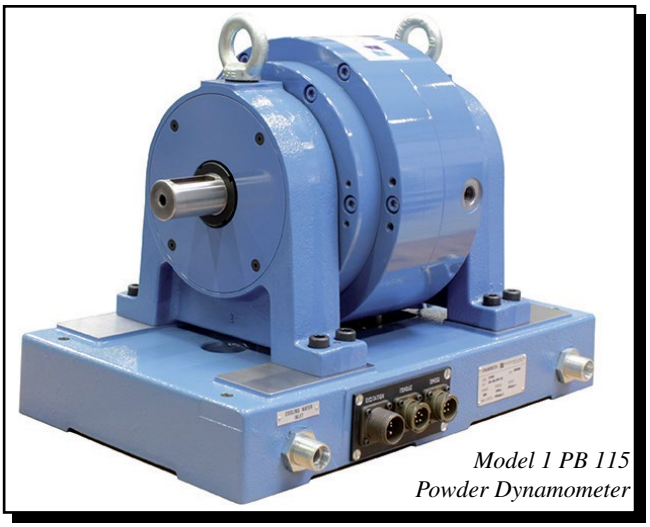

Model 1 PB 115 Powder Dynamometer

DESCRIPTION

Eddy-current Brake Dynamometers (WB series) are ideal for applications requiring high speeds and also when operating in the middle to high power range. Eddy-Current Brakes provide increasing torque as the speed increases, reaching peak torque at rated speed. The dynamometers have low inertia as a result of small rotor diameter. Brake cooling is provided by a water circulation system, which passes inside the stator to dissipate heat generated by the braking power. The water cooling in the WB provides high continuous power ratings (max. 30 kW).

Powder Brake Dynamometers (PB series) are ideal for applications operating in the low to middle speed range or when operating in the middle to high torque range. Powder Brakes provide full torque at zero speed and are water-cooled, allowing for power ratings up to 10 kW. Both WB and PB Dynamometers have accuracy ratings of ±0.3% to ±0.5% full scale, depending on size and system configuration.

Magtrol offers three types of dynamometer brakes to absorb load: Hysteresis, Eddy-current and Magnetic Powder. Each type of Dynamometer has advantages and limitations and choosing the correct one will depend largely on the type of testing to be performed. With over 50 models to choose from, Magtrol Sales professionals are readily available to assist in selecting the proper Dynamometer to meet your testing needs.

APPLICATIONS

Mounted on test benches, WB/PB 115 Series Dynamometers allow performance and reliability testing on driving elements such as electric motors, combustion engines, hand-held drills, servomotors, fans, geared motors, reduction gears, pneumatic equipment, hydraulic transmission systems, starter motors, gas turbines and turbocompressors.

MOTOR TESTING SYSTEMS

Magtrol's M-TEST 7 Software is a state-of-the-art motor testing program for Windows®-based data acquisition. Used with a Magtrol DSP7000 Programmable Dynamometer Controller, Magtrol M-TEST 7 Software provides the control of any Magtrol Eddy-Current or Powder Brake Dynamometer and runs test sequences in a manner best suited to the overall accuracy and efficiency of the Magtrol Motor Test System. The data that is generated by Magtrol's Motor Testing Software can be stored, displayed and printed in tabular or graphic formats, and can be easily imported into a spreadsheet.

Written in LabVIEW™, M-TEST 7 has the flexibility to test a majority of motor types in a variety of ways. Because of LabVIEW's versatility, obtaining data from other sources (e.g. thermocouples), controlling motor power and providing audio/visual indicators is relatively easy.

Magtrol's M-TEST 7 Software is ideal for simulating loads, cycling the unit under test and motor ramping. Because it is easy to gather data and duplicate tests, the software is ideal for use in engineering labs. Tests can be programmed to run on their own and saved for future use allowing for valuable time savings in production testing and incoming/outgoing inspection.

SINGLE DYNAMOMETER CONFIGURATIONS

The Dynamometers can be complemented by various electronic modules such as the DES 411 Power Supply, TSC 401 Torque/ Speed Conditioner and DSP7001 High Speed Programmable Dynamometer Controller.

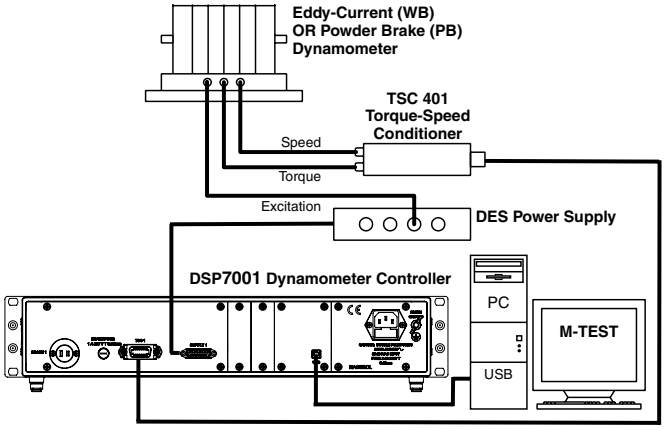

Magtrol also offers In-Line Torque Transducers, which employ a unique non-contact differential transformer torque measuring technology providing extremely accurate torque and speed measurement with superior electrical noise immunity. For a dynamic, high-precision system, the torque transducer can be mounted in line between the unit under test and the dynamometer.

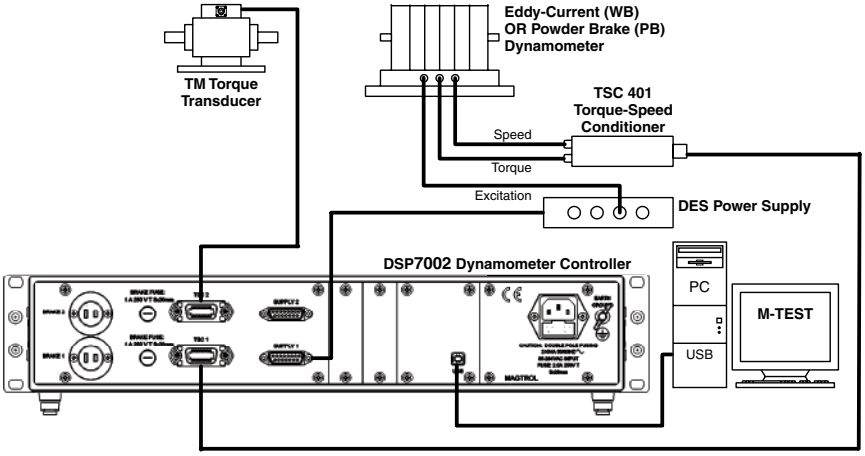

TANDEM CONFIGURATION

Magtrol offers Eddy-Current and Powder Dynamometers mounted in tandem. In tandem, the unique features of each type of dynamometer brake are utilized, allowing the unit under test to be applied with nominal braking torque from zero speed to maximum rotation. The Tandem Dynamometers are available on a number of WB/PB combinations.

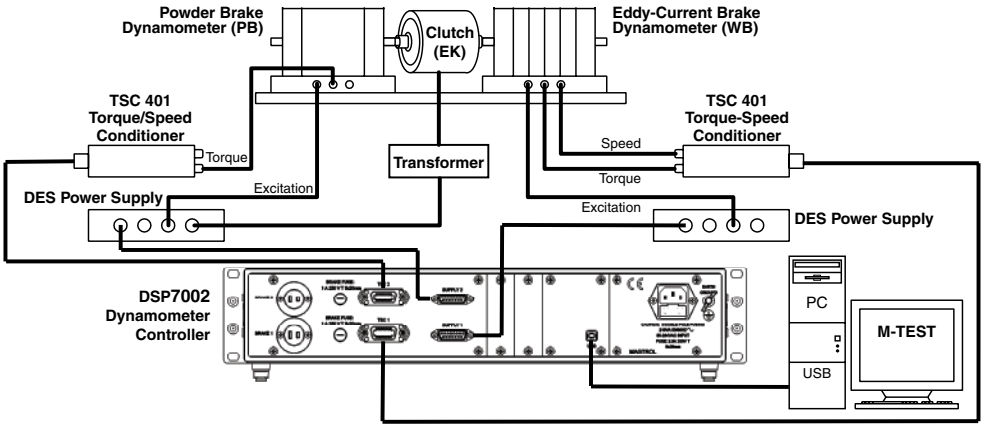

EDDY-CURRENT DYNAMOMETER OPERATING PRINCIPLES

The WB Eddy-Current Dynamometers develop their full power at high rotation speeds. The 115 Series is particularly intended for motors which rotate at high speeds, up to 22,000 rpm. The braking torque depends on the rotation speed.

WB DYNAMOMETER RATINGS

Model	Rated Torque		Drag Torque De-energized		Nominal Input Inertia		Rated Power	Rated Speed	Max. Speed		Excitation Current*
									standard version	high-speed version (HS)	
	N·m	*lb·ft*	*N·m*	*lb·in*	*kg·m²*	*lb·ft·s²*	*kW*	*rpm*	*rpm*	*rpm*	*A*
1 WB 115	50	36.8	0.5	4.43	1.27×10^{-2}	9.36×10^{-3}	15	2865	18,000	22,000	2.5
2 WB 115	100	73.7	1.0	8.85	2.57×10^{-2}	1.89×10^{-2}	30	2865	18,000	22,000	5

* *Voltage at 20 °C is 30 volts.*

Optical Speed Sensor

Each 115 Series WB Dynamometer has an optical speed sensor with a 60-bit pulse wheel delivered as standard.

Cooling Water Consumption

For all WB models: ≈ 30 l/kWh at Δt = 30 °C (Metric)
≈ 8 gal/kWh at Δt = 86 °F (US)

WB TORQUE–SPEED–POWER CURVES

The diagram below shows the characteristic curves for the 115 Series Eddy-Current Dynamometers.

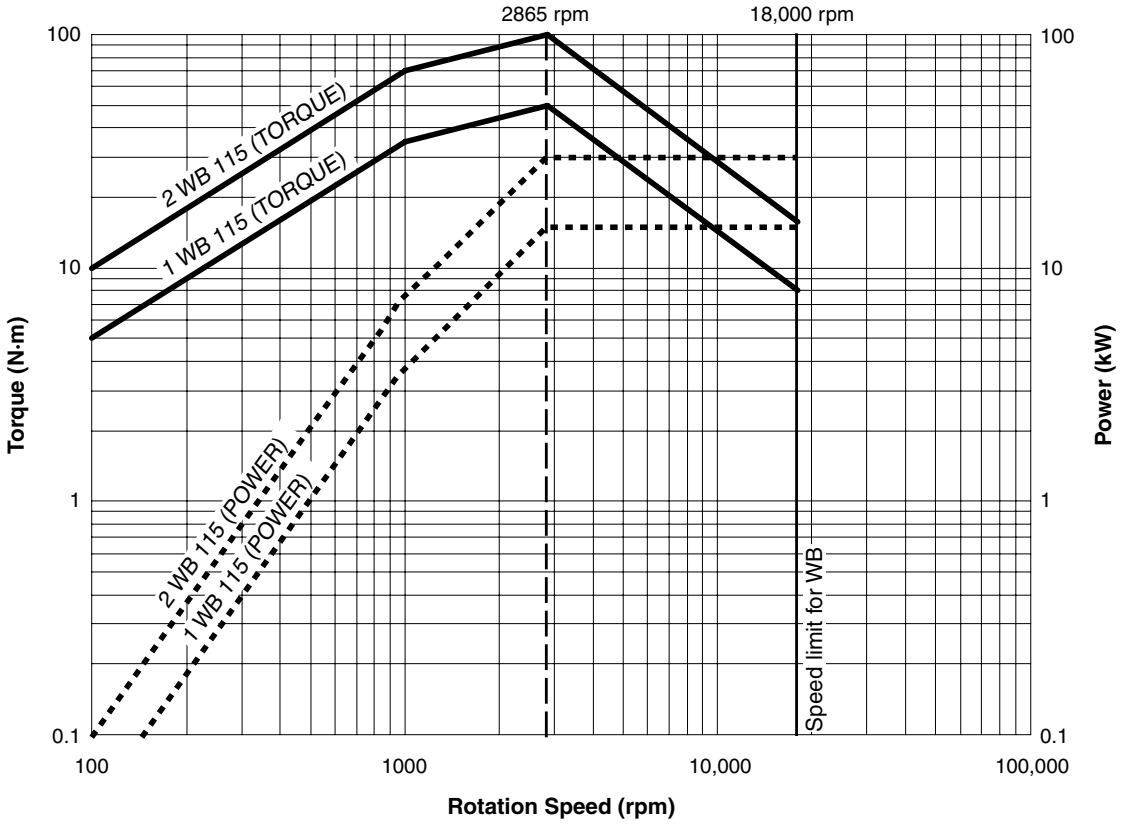

POWDER DYNAMOMETER OPERATING PRINCIPLES

The PB Powder Dynamometers contain, as their name suggests, a magnetic powder. The electrical current passing through the coil generates a magnetic field, which changes the property of the powder, thus producing a smooth braking torque through friction between rotor and stator. The Powder Dynamometers (PB) produce their rated torque at zero speed. The element to be tested can be loaded at standstill to determine the starting torque.

PB DYNAMOMETER RATINGS

Model	Rated Torque		Drag Torque De-energized		Nominal Input Inertia		Rated Power	Rated Speed	Max. Speed	Excitation Current*
	N·m	*lb·ft*	*N·m*	*lb·in*	*kg·m²*	*lb·ft·s²*	*kW*	*rpm*	*rpm*	*A*
1 PB 115	100	73.7	2	17.7	1.24×10^{-2}	9.14×10^{-3}	5	480	3000	2.5
2 PB 115	200	147.5	4	35.4	2.50×10^{-2}	1.84×10^{-2}	10	480	3000	5

* *Voltage at 20 °C is 30 volts.*

Optical Speed Sensor

Each 115 Series PB Dynamometer has an optical speed sensor with a 60-bit pulse wheel delivered as standard. For better speed resolution in low speed applications, Magtrol offers a 600-bit or 6000-bit speed pickup (encoder) as an option.

Cooling Water Consumption

For all PB models: ≈ 30 l/kWh at Δt = 30 °C (Metric)
≈ 8 gal/kWh at Δt = 86 °F (US)

PB TORQUE–SPEED–POWER CURVES

The diagram below shows the characteristic curves for the 115 Series Powder Dynamometers.

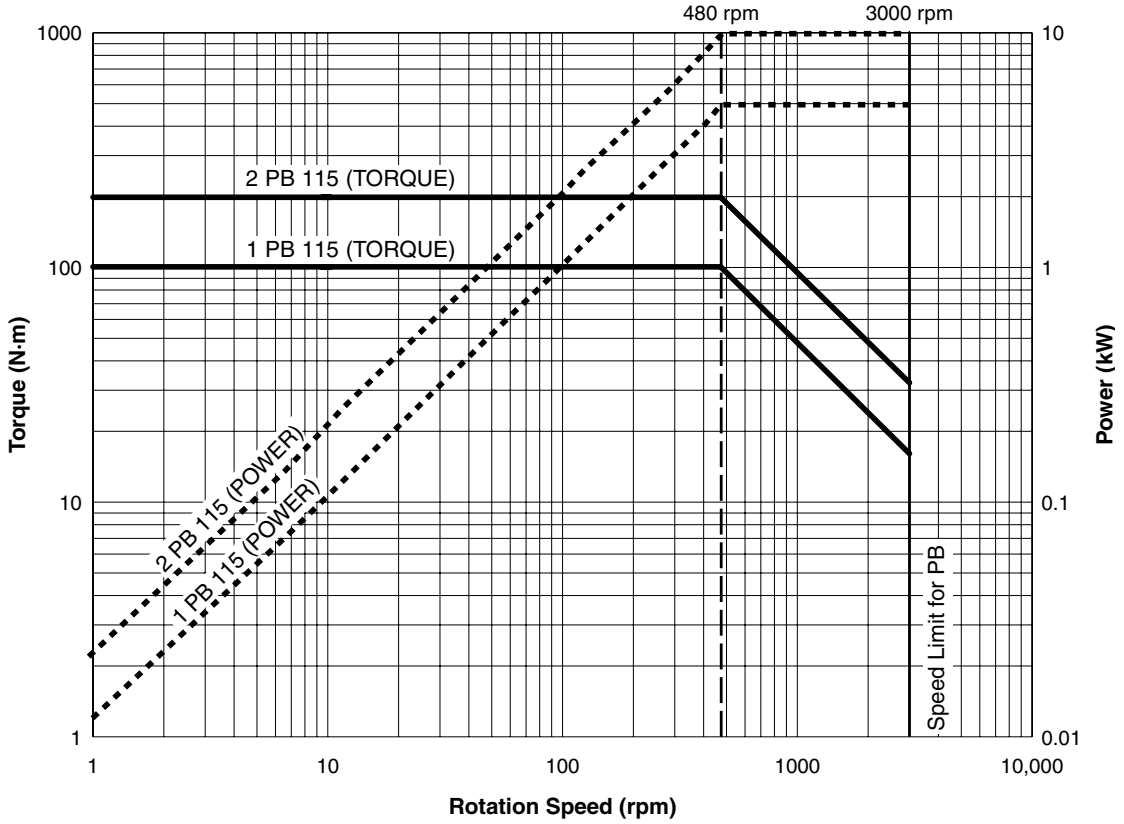

SINGLE DYNAMOMETER DIMENSIONS

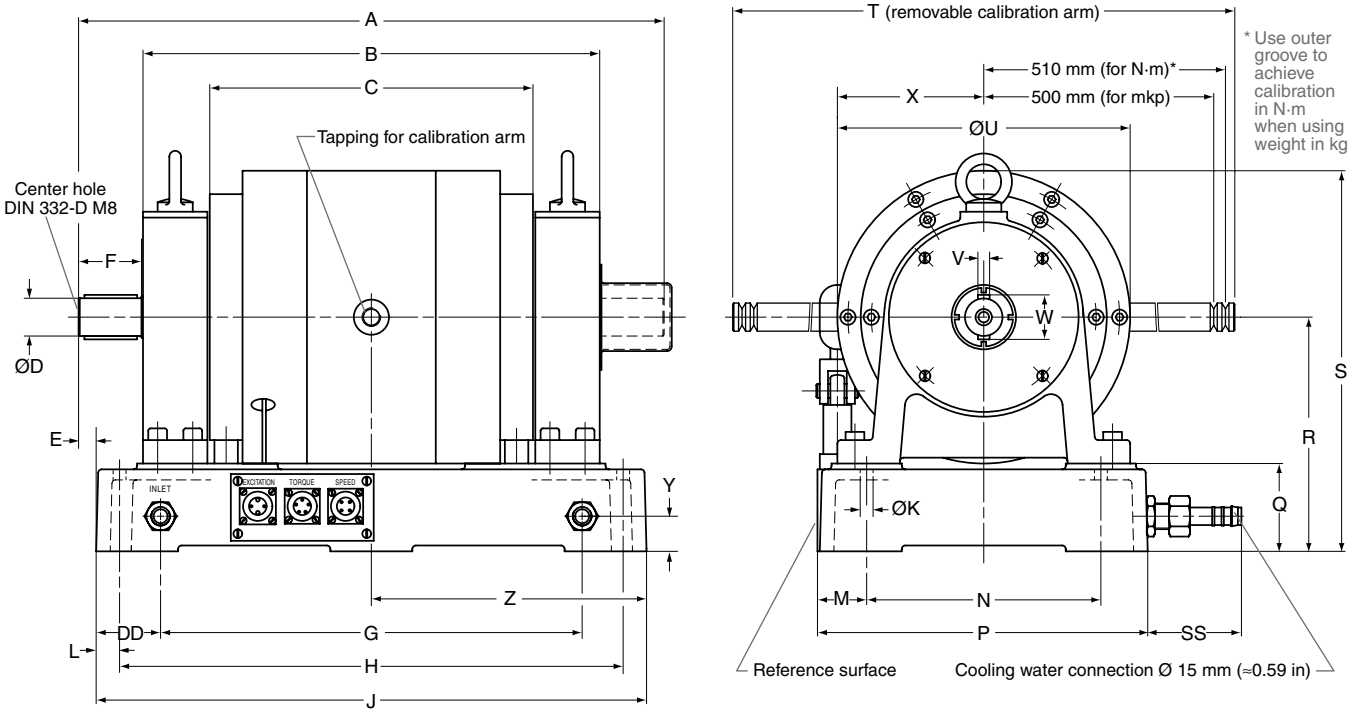

NOTE:
Original dimensions are in Metric units. Dimensions converted to English units have been rounded up to 2 decimal places.

Model	units	A	B	C	D	E	F	G	H	J	K	L	M	N	P
1 WB 115 / 1 PB 115	*mm*	390	280	166	Ø 32h6	-40	54	360	430	470	Ø 11	20	40	200	280
	in	15.35	11.02	6.54	Ø 1.2598 1.2593	-1.57	2.13	14.17	16.93	18.50	Ø 0.43	0.79	1.57	7.87	11.02
2 WB 115 / 2 PB 115	*mm*	500	390	276	Ø 32h6	15	54	360	430	470	Ø 11	20	40	200	280
	in	19.69	15.35	10.87	Ø 1.2598 1.2593	0.59	2.13	14.17	16.93	18.50	Ø 0.43	0.79	1.57	7.87	11.02

Model	units	Q	R	S	T	U	V	W	X	Y	Z	DD	SS	Weight
1 WB 115 / 1 PB 115	*mm*	75	200 ±0.1	325	1038	Ø 250	10h9	38	125	30	197	55	80	80 kg
	in	2.95	7.878 7.870	12.80	40.87	Ø 9.84	0.3937 0.3932	1.50	4.92	1.18	7.76	2.17	3.15	176.37 lb
2 WB 115 / 2 PB 115	*mm*	75	200 ±0.1	325	1038	Ø 250	10h9	38	125	30	235	55	80	130 kg
	in	2.95	7.878 7.870	12.80	40.87	Ø 9.84	0.3937 0.3932	1.50	4.92	1.18	9.25	2.17	3.15	286.60 lb

TANDEM OPERATING PRINCIPLES

Because the characteristics of the WB and PB dynamometers are complementary, Magtrol is able to offer them mounted in a tandem setup. Each dynamometer (WB and PB) can autonomously operate according to its own characteristics. An electromagnetic clutch is needed for this application which automatically switches off at the maximum speed of the PB Powder Dynamometer and automatically switches on at zero speed.

TANDEM DYNAMOMETER RATINGS

Model	Rated Torque		Drag Torque De-energized		Nominal Input Inertia		Rated Power	Rated Speed	Max. Speed	Excitation Current*
	N·m	*lb·ft*	*N·m*	*lb·in*	*kg·m²*	*lb·ft·s²*	*kW*	*rpm*	*rpm*	*A*
2 WB 115 + EK + 1 PB 115	100	73.7	3	26.5	4.18×10^{-2}	3.08×10^{-2}	30	2865	15,000	5
2 WB 115 + EK + 2 PB 115	200	147.5	5	44.2	5.44×10^{-2}	4.01×10^{-2}	30	2865	15,000	5
2 WB 115 + MK + 2 WB 115	200	147.5	2	17.7	5.51×10^{-2}	4.07×10^{-2}	60	2865	15,000	5

* *Voltage at 20 °C is 30 volts.*

Optical Speed Sensor

Each 115 Series Tandem Dynamometer has an optical speed sensor with a 60-bit pulse wheel delivered as standard.

Cooling Water Consumption

For all Tandem models: ≈ 30 l/kWh at Δt = 30 °C (Metric)
≈ 8 gal/kWh at Δt = 86 °F (US)

TANDEM TORQUE–SPEED–POWER CURVES

The diagram below shows the characteristic curves for the 115 Series Tandem Dynamometers.

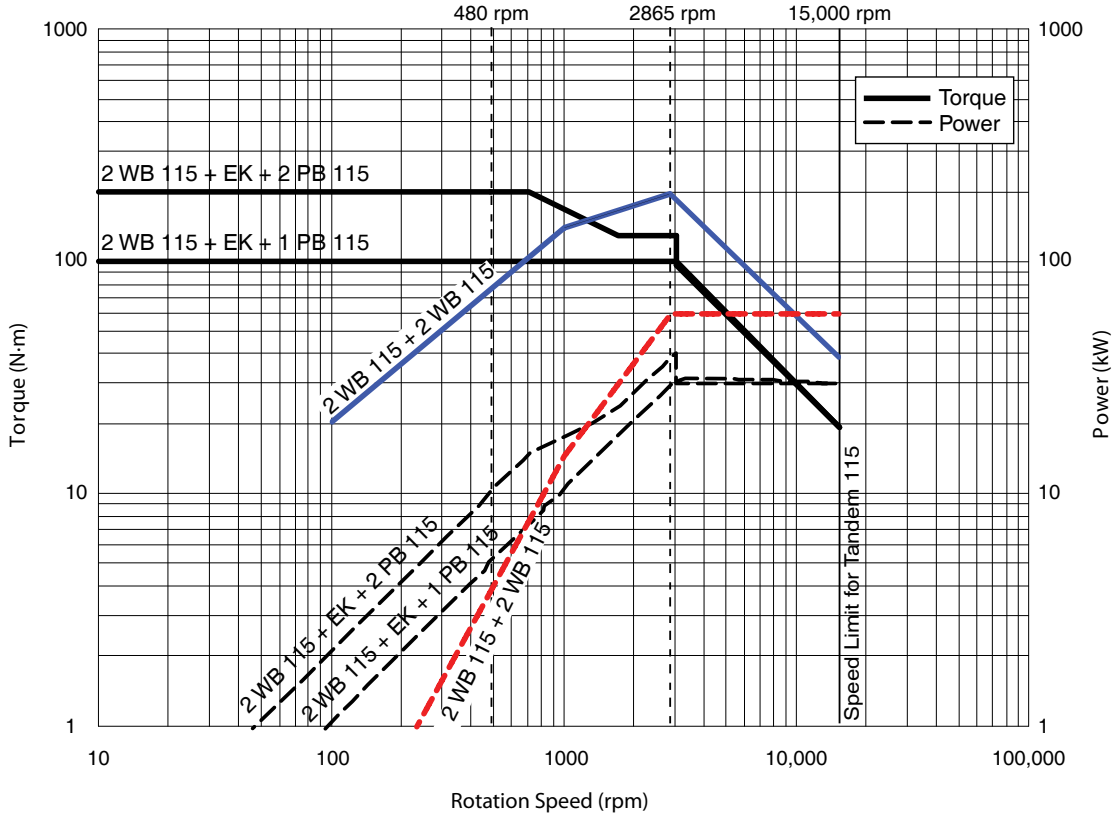

TANDEM DIMENSIONS

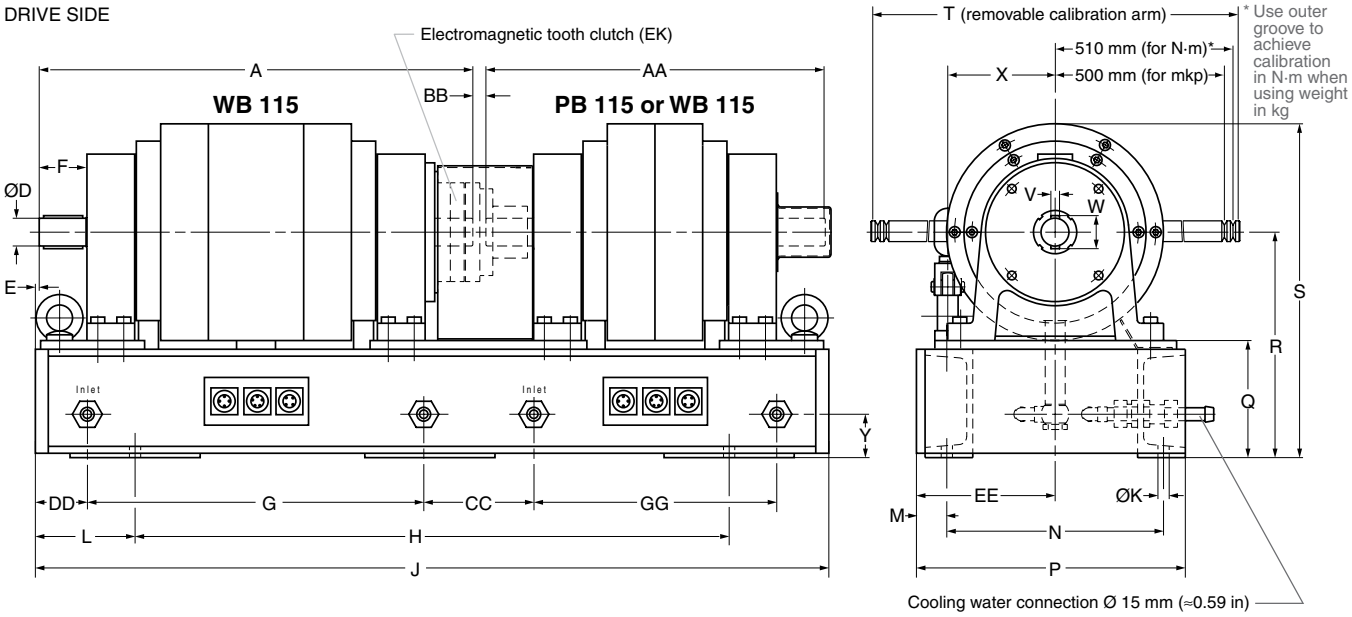

NOTE:
Original dimensions are in Metric units. Dimensions converted to English units have been rounded up to 2 decimal places.

Model	units	A	D	E	F	G	H	J	K	L	M	N	P	Q	R
2 WB 115 + EK + 1 PB 115	*mm*	500	Ø 32h6	4	54	388	685	915	Ø 13	115	35	250	310	135	260 ±0.2
	in	19.69	Ø 1.2598 1.2593	0.16	2.13	15.28	26.97	36.02	Ø 0.51	4.53	1.38	9.84	12.20	5.31	10.244 10.228
2 WB 115 + EK + 2 PB 115	*mm*	500	Ø 32h6	4	54	388	795	1025	Ø 13	115	35	250	310	135	260 ±0.2
	in	19.69	Ø 1.2598 1.2593	0.16	2.13	15.28	31.30	40.35	Ø 0.51	4.53	1.38	9.84	12.20	5.31	10.244 10.228
2 WB 115 + MK + 2 WB 115	*mm*	500	Ø 32h6	4.5	53	388	795	1025	Ø 13	115	35	250	310	135	260±0.2
	in	19.69	Ø 1.2598 1.2593	0.18	2.09	15.28	31.30	40.35	Ø 0.51	4.53	1.38	9.84	12.20	5.31	10.244 10.228

Model	units	S	T	V	W	X	Y	AA	BB	CC	DD	EE	GG	Weight
2 WB 115 + EK + 1 PB 115	*mm*	385	1038	10	38	125	50	390	15	127	60	160 ±0.1	280	214 kg
	in	15.15	40.87	0.39	1.50	4.92	1.97	15.35	0.59	5.00	2.36	6.303 6.295	11.02	471.79 lb
2 WB 115 + EK + 2 PB 115	*mm*	385	1038	10	38	125	50	500	15	127	60	160 ±0.1	390	264 kg
	in	15.15	40.87	0.39	1.50	4.92	1.97	19.69	0.59	5.00	2.36	6.303 6.295	15.35	582.02 lb
2 WB 115 + MK + 2 WB 115	*mm*	385	1038	10	38	125	50	500	15	127	60	160±0.1	390	264 kg
	in	15.15	40.87	0.39	1.50	4.92	1.97	19.69	0.59	5.00	2.36	6.303 6.295	15.35	582.02 lb

DYNAMOMETER OPTIONS

Industrial Version (IS)

Single WB and PB Dynamometers are also available in an industrial version which includes bearing supports, but does not provide a base plate, or torque and speed measurement.

Vertical Mounting (V)

Vertical Mounting is available on the Eddy-Current (WB) Dynamometer only. The vertical version has an adapted bearing fitting and its maximum speed is limited.

Speed Pickup (DG)

All models, including tandems, are equipped with a 60-bit optical speed sensor. On PB Dynamometers, a 600-bit or 6000-bit speed pickup (encoder) is available as an option for low speed applications.

Mechanical Rotor Blocking Device (MB)

A mechanical rotor blocking device, which allows locked rotor testing, is available for the WB Dynamometer.

DYNAMOMETER MODELS

Brake 1	Powder	Tandem
1 WB 115	1 PB 115	2 WB 115 + EK + 1 PB 115
2 WB 115	2 PB 115	2 WB 115 + EK + 2 PB 115
		2 WB 115 + MK + 2 WB 115

ORDERING INFORMATION

If one of the listed options is desired, please follow the dynamometer model (see table above) with a dash and then the appropriate suffix (as noted in parenthesis). For example, a Model 1 PB 115 Powder Dynamometer with an optional 600-bit speed pickup is a 1 PB 115 - DG - 600.

Example: 1 PB 115 - DG - 600

Dynamometer Model — Option

SYSTEM OPTIONS AND ACCESSORIES

	DESCRIPTION	MODEL / PART #
ELECTRONICS	High Speed Programmable Dynamometer Controller	DSP7000
	Torque-Speed Conditioner (includes necessary cables)	TSC 401/121
	Power Supply (includes necessary cables)	DES 411/111
	High Speed Single-Phase Power Analyzer	6510*e*
	High Speed Three-Phase Power Analyzer	6530
SOFT-WARE	M-TEST 7 Motor Testing Software	M-TEST 7
	Temperature Testing Hardware	HW-TTEST
MISC	Dynamometer Table (with grooved table top)	005034
	Transformer (24 VDC) for electromagnetic clutch of tandem dynamometers	234-311-920-011
	Couplings, Thermostatic Sluice, Pressure Sensitive Switch	On Request
	Water Cooling System for Brake	On Request
	Calibration Weights	On Request

Due to the continual development of our products, we reserve the right to modify specifications without forewarning.

www.magtrol.com

MAGTROL INC
70 Gardenville Parkway
Buffalo, New York 14224 USA
Phone: +1 716 668 5555
Fax: +1 716 668 8705
E-mail: magtrol@magtrol.com

MAGTROL SA
Route de Montena 77
1728 Rossens/Fribourg, Switzerland
Phone: +41 (0)26 407 3000
Fax: +41 (0)26 407 3001
E-mail: magtrol@magtrol.ch

Subsidiaries in:
Germany • France
China • India
Worldwide Network of Sales Agents

ISO 9001 BUREAU VERITAS Certification

WBPB 115-US 05/14