LB Large Bore Brakes and MLB Matched Brakes

FEATURES

- Torque up to 12 N·m
- Speed up to 3000 rpm (higher speeds available)
- Power up to 1200 W
- No shaft or bearings: ideal for feed-through applications
- Torque independent of speed
- Long, maintenance-free life
- Operational smoothness
- Superior torque repeatability
- Broad speed range
- Excellent environmental stability

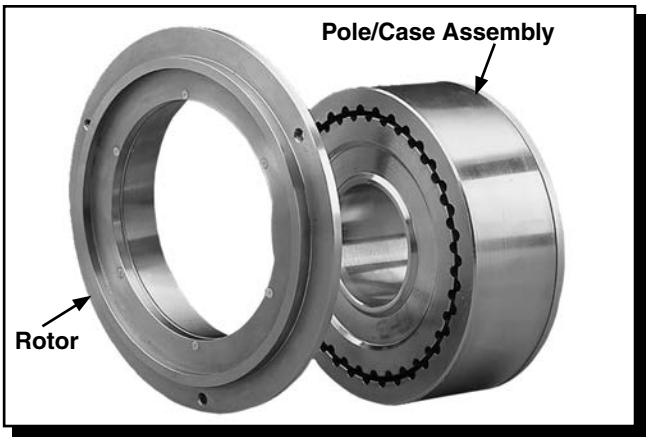

DESCRIPTION

For many years Magtrol has designed hysteresis brakes with large bores, and without a shaft or bearings. These uniquely designed brakes contain a large inside diameter to accommodate wire fed directly through the brake, while the rotor mounted to a tape supply reel, provides the required tension.

Magtrol Large Bore Brakes consist of two primary parts: a pole/case assembly and a rotor. The pole/case assembly is usually mounted in a stationary position within the machine, while the rotor is shaft-mounted concentrically within the pole/case assembly.

As with all of Magtrol's hysteresis devices, LB/MLB Series Brakes operate without the use of magnetic particles or friction components. This provides absolute smoothness, superior torque repeatability, quiet operation and a long, maintenance-free life.

MATCHED BRAKES

In tension control applications that have multiple webs or multiple strands, it is very desirable to match the tension of each web or strand. This is most commonly attained by using a closed-loop servo control system which controls current to a braking device through the use of dancer arms, follower arms and in-line tension transducers. The problem with such systems is that each web or strand must be individually controlled, increasing the cost and complicating the system with multiple sensors and power supplies.

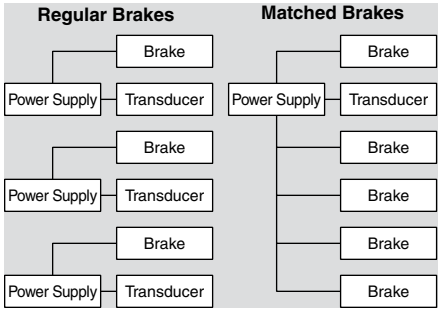

To solve this problem, Magtrol developed a system to assure that every brake of a given model designation will be matched—at a predetermined torque and current point—to other brakes of the same model designation. Regardless of material and manufacturing tolerances, each brake is matched at the selected match point to within a tolerance of ±1%. The maximum deviation in torque from brake to brake at any point along their torque/current curve (from 0 torque up to the selected matched torque point) is less than ±4% of the selected matched torque value. With this level of matching, a system with multiple tension rollers would provide tension consistency within ±1% if set at the matched point with all brakes receiving the same current. The matched point can be any value between 50% and 100% of rated torque, which allows the brakes to be optimized for specific applications.

APPLICATIONS

- Helical wrapping, braiding and other feed-through applications—used in machines for manufacturing cable, wire, fiber optic cable, rope and tape
- Flyer control in winding operations

PRINCIPLES OF HYSTERESIS

Overview

The hysteresis effect in magnetism is applied to torque control by the use of two basic components –a reticulated pole structure and a specialty steel rotor/shaft assembly–fastened together but not in physical contact. Until the field coil is energized, the drag cup can spin freely on the ball bearings. When a magnetizing force from either a field coil or magnet is applied to the pole structure, the air gap becomes a flux field. The rotor is magnetically restrained, providing a braking action between the pole structure and rotor.

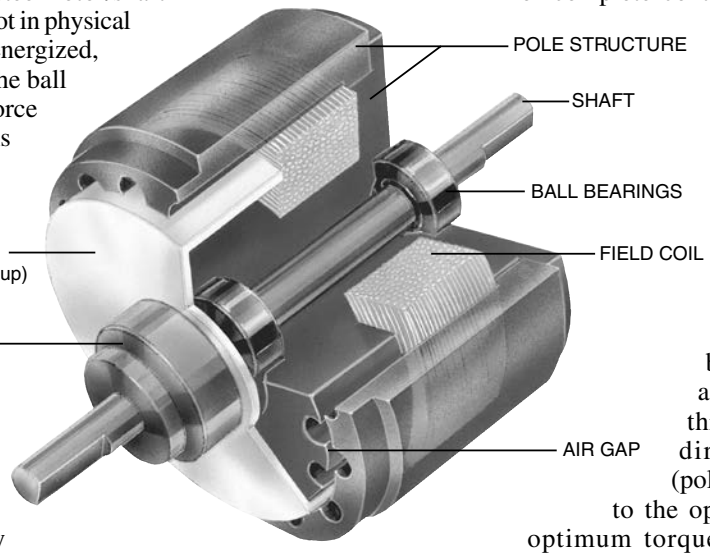

Because torque is produced strictly through a magnetic air gap, without the use of friction or shear forces, Magtrol Hysteresis Brakes provide absolutely smooth, infinitely controllable torque loads, independent of speed, and they operate quietly without any physical contact of interactive members. As a result, with the exception of shaft bearings, no wear components exist.

Control

In an electrically operated Hysteresis Brake, adjustment and control of torque is provided by a field coil. This allows for complete control of torque by adjusting DC current to the field coil. Adjustability from a minimum value (bearing drag) to a maximum value of rated torque is possible. Additional torque in the range of 15-25% above rated torque may be available on some brakes.

The amount of braking torque transmitted by the brake is proportional to the amount of current flowing through the field coil. The direction of current flow (polarity) is of no consequence to the operation of the brake. For optimum torque stability, a DC supply with current regulation is recommended. This will help to minimize torque drift attributable to changes in coil temperature and in-line voltage, which can result in changes in coil current, and consequently, in torque.

ADVANTAGES OF HYSTERESIS DEVICES

Long, Maintenance-Free Life

Magtrol Hysteresis Brakes produce torque strictly through a magnetic air gap, making them distinctly different from mechanical-friction and magnetic particle devices. Because hysteresis devices do not depend on friction or shear forces to produce torque, they do not suffer the problems of wear, particle aging, and seal leakage. As a result, hysteresis devices typically have life expectancies many times that of friction and magnetic particle devices.

Life Cycle Cost Advantages

While the initial cost of hysteresis devices may be the same or slightly more than that of their counterparts, the high cost of replacing, repairing and maintaining friction and magnetic particle devices often makes hysteresis devices the most cost-effective means of tension and torque control available.

Excellent Environmental Stability

Magtrol hysteresis devices can withstand significant variation in temperature and other operating conditions. In addition, because they have no particles or contacting active parts, Hysteresis Brakes are extremely clean. Magtrol devices are used in food and drug packaging operations, in clean rooms, and environmental test chambers.

Operational Smoothness

Because they do not depend on mechanical friction or particles in shear, Hysteresis Brakes are absolutely smooth at any speed. This feature is often critical in wire drawing, packaging and many other converting applications.

Superior Torque Repeatability

Because torque is generated magnetically without any contacting parts or particles, Hysteresis Brakes provide superior torque repeatability. Friction and magnetic particle devices are usually subject to wear and aging with resultant loss of repeatability. Magtrol devices will repeat their performance precisely, to ensure the highest level of process control.

Broad Speed Range

Magtrol hysteresis devices offer the highest slip speed range of all electric torque control devices. Depending on size, kinetic power requirements and bearing loads, many Magtrol Brakes can be operated at speeds in excess of 10,000 rpm. In addition, full torque is available even at zero slip speed and torque remains absolutely smooth at any slip speed.

RATINGS

Large Bore Brake Model	Matched Brake Model	Min. Torque at Rated Current	Rated Current	Voltage	Maximum Speed*	Kinetic Power**		Nominal Power	Resistance at 25 °C ±10%
						5 Minutes	Continuous		
		Nm	mA	VDC	rpm	W	W	W	Ω
LB-250M-2	MLB-250M-2	1.50	270	25.6	3000	450	110	6.99	95
LB-450M-2	MLB-450M-2	3.00	442	22.1	2500	670	160	9.80	50
LB-750M-2	MLB-750M-2	5.00	383	23.0	2000	1000	200	8.82	60
LB-1750M-2	MLB-1750M-2	12.00	500	26.0	1800	1200	350	13.00	52

* *Higher speeds, up to 8000 rpm, are available on special basis.*

** *Kinetic power ratings are maximum values based on limiting coil and/or bearing temperature to approximately 100 ºC, and should not be exceeded. Actual values in service may vary ±50% depending on mounting, ventilation, ambient temperature, etc.*

DIMENSIONS

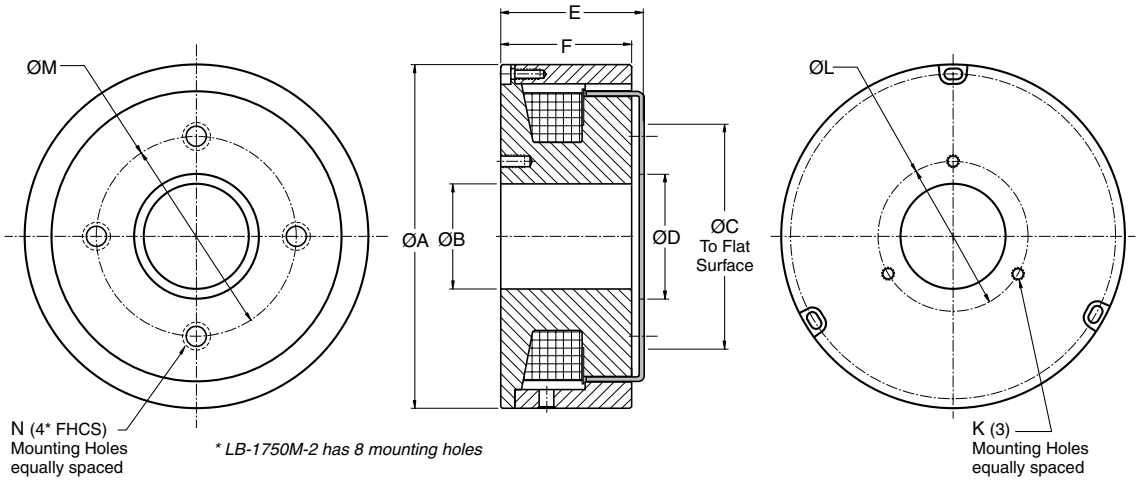

FRONT VIEW (Rotor) **SIDE VIEW** **REAR VIEW (Pole/Case Assembly)**

Large Bore Brake Model	Matched Brake Model	ØA	ØB*	ØC	ØD	E	F	K	ØL	ØM	N	Weight
LB-250M-2	MLB-2502-2	112,7	28,0	70,0	36,0	54,5	50,4	M5 × 10,0	45,0	54,0	M4	3,00 kg
LB-450M-2	MLB-450M-2	137,7	42,0	90,0	50,0	57,0	52,4	M5 × 10,0	60,0	80,0	M4	5,30 kg
LB-750M-2	MLB-750M-2	158,0	50,0	110,0	60,0	80,0	72,8	M6 × 12,0	70,0	90,0	M5	10,00 kg
LB-1750M-2	MLB-1750M-2	226,0	80,0	160,0	120,0	83,0	76,0	M6 × 12,0	100,0	140,0	M5	21,00 kg

* *Slightly larger bore diameters can be provided but will result in reduced torque ratings.*

OPERATING CONSIDERATIONS

Alignment Notes

- The pole/case assembly and the rotor are shipped as separate items.
- It is the responsibility of the machine designer to assure proper alignment of the mating brake parts in the final assembly.
- These components must be mounted so that the concentricity and perpendicularity between the rotor and pole does not exceed the specified tolerances.
- Refer to individual LB model drawings, available on Magtrol's web site, for further details.

Additional Information

At the standard bore diameters, actual brake torque at rated current will normally exceed the minimum guaranteed values. Larger bore diameters can be provided, however, reductions in performance will result as bore diameters are increased. Any modification to a Large Bore Brake should be reviewed in detail with Magtrol before ordering.

SPECIAL DESIGNS

Since 1953, Magtrol has created literally thousands of special and modified brake designs to help solve specific application problems for our customers.

Common Modifications

- Non-Standard Coil Voltages
- Special Shaft Configurations: keyways, flats, holes and hollow
- Dust Covers
- Speed Pickups
- Special Mounting Configurations
- Non-Standard Lead: material, lengths, location
- Higher Torque Devices
- High Speed Units

Higher Torque Capability

It is Magtrol's policy never to overstate the capabilities of our products. As a result, our brakes are conservatively rated. However, Magtrol can typically provide higher torque of up to 15% to 25% above rated value in the same size device to meet your requirements. Special designs capable of producing even higher torques are also available.

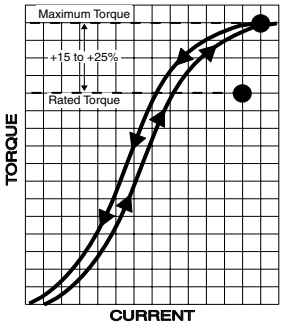

BRAKE OPTIONS

Torque Current Curves

Nominal performance characteristic curves similar to that shown above will be provided by Magtrol, upon request. Precise calibration curves for individual brakes can be provided, but must be specified at time of order and do require an additional charge.

Couplings

Although intended for coupled service, moderate overhung loads can be tolerated, depending on such operating characteristics as speed, weight, and center of gravity of load. Care should be taken to make certain that the shaft is properly aligned. Couplings should be of proper size and flexibility to adequately protect bearings from undue stress and shock loading.

POWER SUPPLIES

For optimum torque stability, Magtrol offers four different power supplies for its Hysteresis Brakes and Clutches:

Model 5200 Power Supply

The Model 5200 is an unregulated 0 to 35 VDC Power Supply which offers control and regulation of the braking torque via a 10 turn potentiometer. The 5200 is our most basic control for manual testing in an open loop torque control mode.

Model 5210 Current Regulated Power Supply

The Model 5210 provides the same control capabilities as the 5200, and also provides current regulation of the brake. With regulated current, the 5210 will eliminate torque drift caused by temperature changes within the brake coil.

Model 5250 Current Regulated Power Supply

Model 5250-2 is an open frame, current regulated power supply.

VM Series Proportional Amplifier/controller

The VM Series Proportional Amplifier/Controller is used to supply and control current (up to 3 A) to Magtrol Hysteresis Brakes and Clutches and Convection Powder Brakes. The analog inputs of the amplifier/controller are designed for 0-10 V or 4-20mA signals (using switches S1 and S2).

SOLID MODELS

Solid 3D models are available for Magtrol Hysteresis Devices at:

www.magtrol.com/brakesandclutches/largebore_brakes.html

Due to the continual development of our products, we reserve the right to modify specifications without forewarning.

www.magtrol.com

MAGTROL INC
70 Gardenville Parkway
Buffalo, New York 14224 USA
Phone: +1 716 668 5555
Fax: +1 716 668 8705
E-mail: magtrol@magtrol.com

MAGTROL SA
Route de Montena 77
1728 Rossens/Fribourg, Switzerland
Phone: +41 (0)26 407 3000
Fax: +41 (0)26 407 3001
E-mail: magtrol@magtrol.ch

Subsidiaries in:
Great Britain
Germany • France
China • India
Worldwide Network of Sales Agents

ISO 9001 BUREAU VERITAS Certification

LB-US 03/13