HCF Series Hysteresis Clutches

FEATURES

- Torque up to 1.8 N·m
- Speed up to 3600 rpm
- Power up to 450 W
- Torque independent of speed
- Long, maintenance-free life
- Operational smoothness
- Superior torque repeatability
- Broad speed range
- Excellent environmental stability

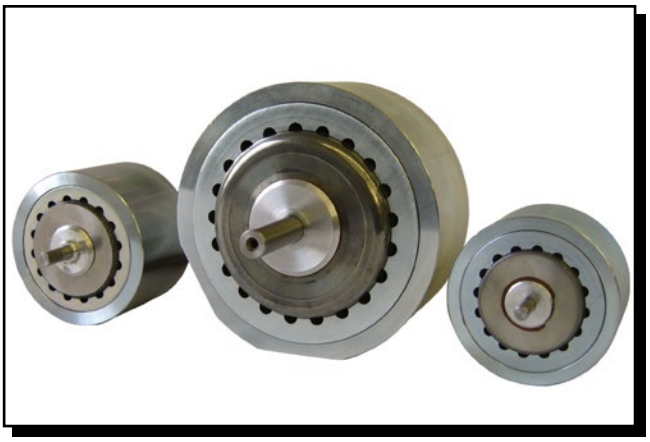

DESCRIPTION

As with all Magtrol hysteresis products, the HCF Series Hysteresis Clutches develop torque strictly through a magnetic air gap, ensuring an absolutely smooth transmission of torque from the drive unit to the driven element. Designed to be powered without the use of brushes or slip rings, and being a pure hysteresis device that does not rely on friction elements or magnetic particles, there is never any fear of contamination due to wear particles or leaky seals. This makes Magtrol Hysteresis Clutches ideal for use in food processing and clean room environments.

APPLICATIONS

- Precise control of torque for capping, bolting and other screw applications
- Torque limiting in order to prevent over torque and provide precise, stable and smooth application of torque
- Closed-loop winding tension and speed control

RATINGS

Model	Minimum Torque at Rated Current	Rated Current	Voltage*	Maximum Speed	Kinetic Power**		Nominal Power
					5 Minutes	Continuous	
	mNm	*mA*	*VDC*	*rpm*	*W*	*W*	*W*
HCF-8M	56.5	150	27.0	3600	60	15	4.05
HCF-16M	113	270	27.0	3600	75	20	7.29
HCF-32M	226	332	24.0	3600	90	25	7.99
HCF-120M	850	200	24.0	3600	300	75	4.80
HCF-250M	1800	415	24.9	3600	450	110	10.30

Model	Resistance at 25°C ±10%	Inertia		Weight
		Input Shaft	Output Shaft	
	Ω	*kg·cm²*	*kg·cm²*	*kg*
HCF-8M	180	0.299	0.038	0.50
HCF-16M	100.0	0.543	0.041	0.63
HCF-32M	72.5	0.984	0.089	1.00
HCF-120M	120.0	9.490	0.910	4.50
HCF-250M	60.0	25.560	2.760	5.60

* *Other coil voltages are available.*
** *Kinetic power ratings are maximum values based on limiting coil and/or bearing temperature to approximately 100 ºC, and should not be exceeded. Actual values in service may vary ±50% depending on mounting, ventilation, ambient temperature, etc.*

PRINCIPLES OF HYSTERESIS

Overview

The hysteresis effect in magnetism is applied to torque control by the use of two basic components –a reticulated pole structure and a specialty steel rotor/shaft assembly–fastened together but not in physical contact. Until the field coil is energized, the drag cup can spin freely on the ball bearings. When a magnetizing force from either a field coil or magnet is applied to the pole structure, the air gap becomes a flux field. The rotor is magnetically restrained, providing a braking action between the pole structure and rotor.

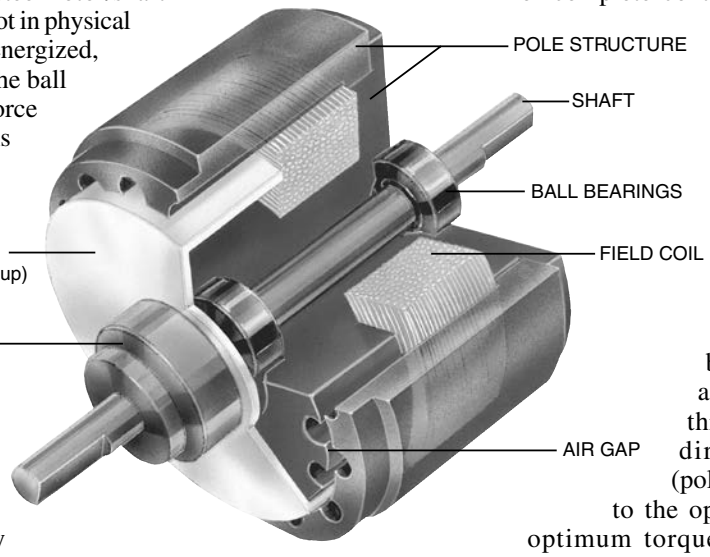

Because torque is produced strictly through a magnetic air gap, without the use of friction or shear forces, Magtrol Hysteresis Brakes provide absolutely smooth, infinitely controllable torque loads, independent of speed, and they operate quietly without any physical contact of interactive members. As a result, with the exception of shaft bearings, no wear components exist.

Control

In an electrically operated Hysteresis Brake, adjustment and control of torque is provided by a field coil. This allows for complete control of torque by adjusting DC current to the field coil. Adjustability from a minimum value (bearing drag) to a maximum value of rated torque is possible. Additional torque in the range of 15-25% above rated torque may be available on some brakes.

The amount of braking torque transmitted by the brake is proportional to the amount of current flowing through the field coil. The direction of current flow (polarity) is of no consequence to the operation of the brake. For optimum torque stability, a DC supply with current regulation is recommended. This will help to minimize torque drift attributable to changes in coil temperature and in-line voltage, which can result in changes in coil current, and consequently, in torque.

ADVANTAGES OF HYSTERESIS DEVICES

Long, Maintenance-Free Life

Magtrol Hysteresis Brakes produce torque strictly through a magnetic air gap, making them distinctly different from mechanical-friction and magnetic particle devices. Because hysteresis devices do not depend on friction or shear forces to produce torque, they do not suffer the problems of wear, particle aging, and seal leakage. As a result, hysteresis devices typically have life expectancies many times that of friction and magnetic particle devices.

Life Cycle Cost Advantages

While the initial cost of hysteresis devices may be the same or slightly more than that of their counterparts, the high cost of replacing, repairing and maintaining friction and magnetic particle devices often makes hysteresis devices the most cost-effective means of tension and torque control available.

Excellent Environmental Stability

Magtrol hysteresis devices can withstand significant variation in temperature and other operating conditions. In addition, because they have no particles or contacting active parts, Hysteresis Brakes are extremely clean. Magtrol devices are used in food and drug packaging operations, in clean rooms, and environmental test chambers.

Operational Smoothness

Because they do not depend on mechanical friction or particles in shear, Hysteresis Brakes are absolutely smooth at any slip ratio. This feature is often critical in wire drawing, packaging and many other converting applications.

Superior Torque Repeatability

Because torque is generated magnetically without any contacting parts or particles, Hysteresis Brakes provide superior torque repeatability. Friction and magnetic particle devices are usually subject to wear and aging with resultant loss of repeatability. Magtrol devices will repeat their performance precisely, to ensure the highest level of process control.

Broad Speed Range

Magtrol hysteresis devices offer the highest slip speed range of all electric torque control devices. Depending on size, kinetic power requirements and bearing loads, many Magtrol Brakes can be operated at speeds in excess of 10,000 rpm. In addition, full torque is available even at zero slip speed and torque remains absolutely smooth at any slip speed.

CLUTCH DIMENSIONS

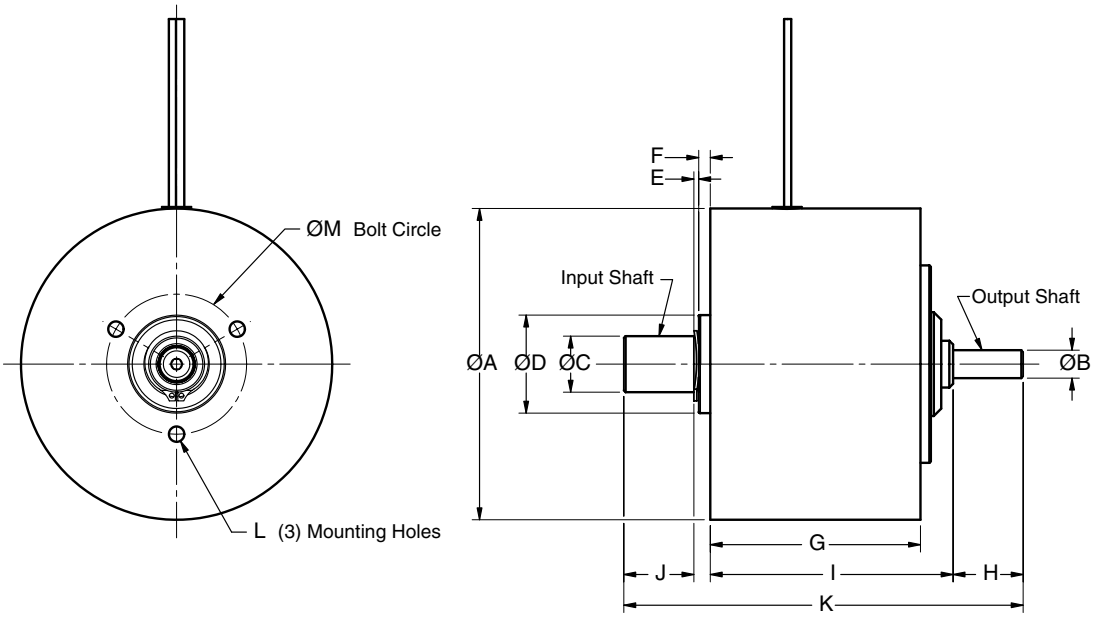

Model	ØA	ØB	ØC	ØD	E	F	G	H	I	J	K	L	ØM
HCF-8M	55.0	5 h6	10 h6	19 h5	1.0	2.5	31.2	12.0	36.0	12.0	63.6	M3 × 6.0	25
HCF-16M	60.0	5 h6	10 h6	19 h4	1.2	2.5	33.5	12.0	37.3	15.0	67.8	M3 × 8.0	25
HCF-32M	67.0	6 j5	12 j5	21 h4	1.0	2.5	45.0	15.0	52.0	15.0	85.5	M4 × 8.0	30
HCF-120M	112.0	10 h5	15 h5	32 h4	1.6	4.4	60.0	30.0	72.0	30.0	137.0	M5 × 10.0	50
HCF-250M	127.0	12 h4	20 h4	42 h4	1.9	5.7	69.9	27.0	83.5	25.2	143.3	M5 × 10.0	60

PILLOW BLOCK DIMENSIONS

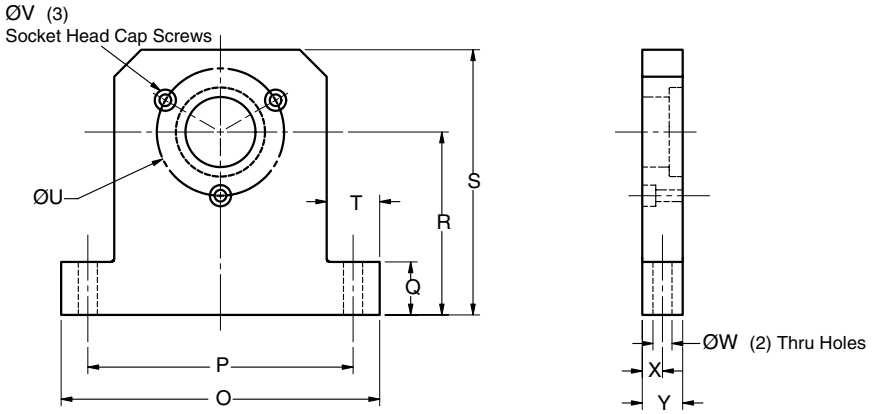

Pillow Block Model	For Clutch Model(s)	O	P	Q	R	S	T	ØU	V	ØW	X	Y
4729	HCF-8M/HCF-16M	60	50	10	35	50	11	25	M3 × 0.5	5.5	4.80	9.5
4724	HCF-32M	60	50	10	40	60	11	30	M4 × 0.7	5.5	4.80	9.5
4725	HCF-120M	90	75	15	60	80	13	50	M5 × 0.8	6.6	6.35	12.7
4830	HCF-250M	150	125	25	90	125	25	60	M5 × 0.8	9.0	9.50	19.1

NOTE: Mounting screws are supplied with each pillow block kit.

SPECIAL DESIGNS

Since 1953, Magtrol has created literally thousands of special and modified clutch designs to help solve specific application problems for our customers.

Common Modifications

- Non-Standard Coil Voltages
- Special Shaft Configurations: keyways, flats, holes and hollow
- Dust Covers
- Speed Pickups
- Special Mounting Configurations
- Non-Standard Lead: material, lengths, location
- Higher Torque Devices
- High Speed Units

Higher Torque Capability

It is Magtrol's policy never to overstate the capabilities of our products. As a result, our clutches are conservatively rated. However, Magtrol can typically provide higher torque of up to 15% to 25% above rated value in the same size device to meet your requirements. Special designs capable of producing even higher torques are also available.

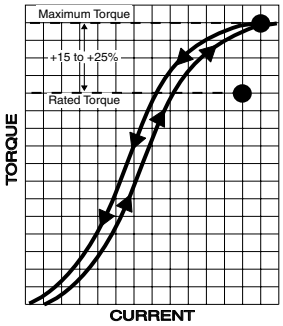

CLUTCH OPTIONS

Torque Current Curves

Nominal performance characteristic curves similar to that shown above will be provided by Magtrol, upon request. Precise calibration curves for individual brakes can be provided, but must be specified at time of order and do require an additional charge.

Couplings

Although intended for coupled service, moderate overhung loads can be tolerated, depending on such operating characteristics as speed, weight, and center of gravity of load. Care should be taken to make certain that the shaft is properly aligned. Couplings should be of proper size and flexibility to adequately protect bearings from undue stress and shock loading.

POWER SUPPLIES

For optimum torque stability, Magtrol offers four different power supplies for its Hysteresis Brakes and Clutches:

Model 5200 Power Supply

The Model 5200 is an unregulated 0 to 35 VDC Power Supply which offers control and regulation of the braking torque via a 10 turn potentiometer. The 5200 is our most basic control for manual testing in an open loop torque control mode.

Model 5210 Current Regulated Power Supply

The Model 5210 provides the same control capabilities as the 5200, and also provides current regulation of the brake. With regulated current, the 5210 will eliminate torque drift caused by temperature changes within the brake coil.

Model 5250 Current Regulated Power Supply

Model 5250-2 is an open frame, current regulated power supply.

VM Series Proportional Amplifier/controller

The VM Series Proportional Amplifier/Controller is used to supply and control current (up to 3 A) to Magtrol Hysteresis Brakes and Clutches and Convection Powder Brakes. The analog inputs of the amplifier/controller are designed for 0-10 V or 4-20mA signals (using switches S1 and S2).

SOLID MODELS

Solid 3D models are available for Magtrol Hysteresis Devices at:

www.magtrol.com/brakesandclutches/hysteresis_clutches.html

Due to the continual development of our products, we reserve the right to modify specifications without forewarning.

www.magtrol.com

MAGTROL INC
70 Gardenville Parkway
Buffalo, New York 14224 USA
Phone: +1 716 668 5555
Fax: +1 716 668 8705
E-mail: magtrol@magtrol.com

MAGTROL SA
Route de Montena 77
1728 Rossens/Fribourg, Switzerland
Phone: +41 (0)26 407 3000
Fax: +41 (0)26 407 3001
E-mail: magtrol@magtrol.ch

Subsidiaries in:
Great Britain
Germany • France
China • India
Worldwide Network of Sales Agents

ISO 9001 BUREAU VERITAS Certification

HC-US 03/13